CRAFTA FORMS

FINISHES STUDIO



153

Curved Frosted Decorative Glass Block ORNVITRUM -CFFGB

Curved Frosted Decorative Glass Block-ORNVITRUM-CFFGB features a curved design and a textured, crushed-ice finish. Measuring 150 × 150 mm with a 20 mm thickness, it is ideal for decorative partitions, feature walls, and interior screens, adding visual interest while softening light and enhancing privacy.

ask@craftaforms.com
craftaforms.com



Curved Frosted Decorative Glass Block ORNVITRUM-CFFGB

ORNVITRUM CFFGB Curved Frosted Decorative Glass Block combines a curved shape with a frosted, textured surface for modern architectural interiors. Its crushed-ice effect adds depth and visual interest while allowing soft light to pass through. Each block measures 150 × 150 mm, has a thickness of 20 mm, and weighs approximately 1.2 kg. Moreover, it is suitable for decorative partitions, feature walls, room dividers, and stylish interior screens in residential and commercial spaces. Compatible stainless steel fixing accessories support modular assembly. Therefore, it offers a creative solution for designers seeking a balance of light, privacy, and contemporary style.

MATERIAL

Glass

DIMENSION

Size	150 x 150 mm
Component Diameters	20 mm
Approximate Weight	1.2 Kg
Fire Resistance	Non combustible
Water Absorption	0 %

SURFACE FINISHES

Frosted, Textured Crushed-Ice Finish

FINISHES

Clear, Aqua, Blue, Green, Amber, Pink, Smoke Gray, Purple, Tea Color, Custom

DIMENSIONAL DETAIL

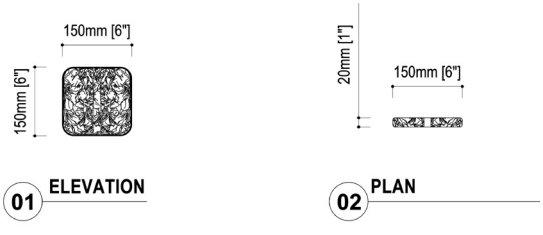

Download .dwg

ask@craftaforms.com
craftaforms.com

Finishes

ORNVITRUM CFFGB features a frosted glass finish with a textured, crushed-ice effect. Its curved surface creates a distinctive visual appearance while softening light and helping maintain privacy. The textured finish suits modern partitions, feature walls, and decorative screens. Confirm available finish options and any custom requirements with the manufacturer.



CFFGB-01

Clear



CFFGB-02

Aqua



CFFGB-03

Blue



CFFGB-04

Green



CFFGB-05

Amber



CFFGB-06

Pink



CFFGB-06

Smoke Gray



CFFGB-06

Purple



CFFGB-06

Tea Color

ask@craftaforms.com
craftaforms.com

Installation Detail

Install ORNVITRUM CFFGB using a suitable, engineered fixing system. First, fit protective silicone sleeves into the designated glass apertures to reduce direct contact with metal parts. Next, position the compatible rods and 201 stainless steel connectors, aligning each block carefully. Finally, secure the assembly to suitable floor and ceiling supports. Confirm fixing dimensions, structural loads, and installation details before work begins.

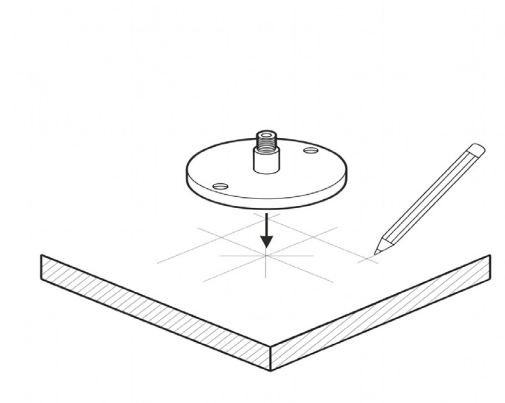

Surface Preparation and Marking

Mark and verify the precise layout coordinates on the mounting floor and ceiling surfaces.

Position the base mounting plate, align it with the structural reference lines, and securely anchor it using appropriate heavy-duty fasteners suited to the substrate.

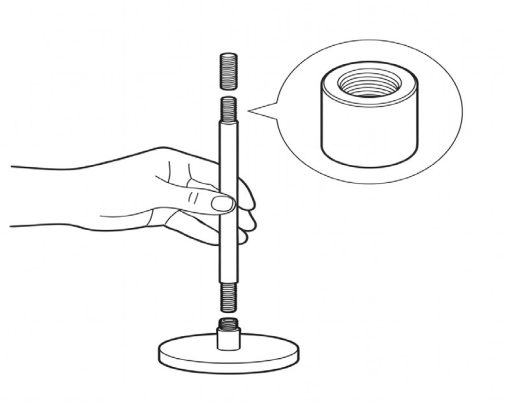

Rod and Fixing System Preparation

Thread the primary threaded rod or lower coupling sleeve securely into the anchored base plate.

Ensure the connection is plumb and tightened to specification using standard technical assembly tools before loading components.

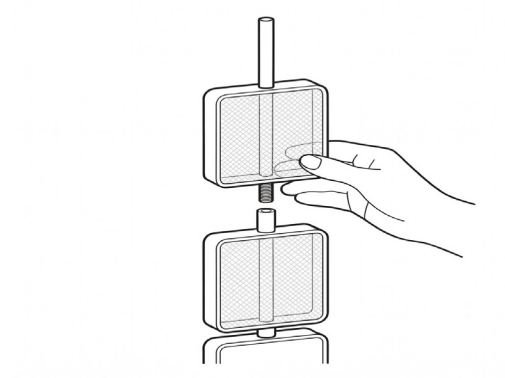

Positioning and Stacking the Product

Carefully lower the first textured glass block module over the threaded rod, letting it rest evenly on the base collar.

Screw on the intermediate brass connecting sleeve/rod segment to lock the glass panel in place, then repeat the sequence vertically to stack subsequent glass blocks and rods in alternating order.

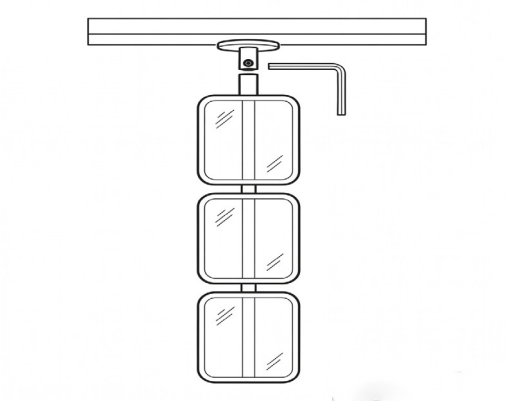

Final Alignment and Inspection

Position the top anchoring cap fixture against the ceiling track or mounting plate and thread it down onto the final vertical rod segment.

Adjust tension evenly across the assembly to ensure vertical plumbness, structural rigidity, and clean alignment across all modular columns. Conduct a final visual and

Connect with Us

Where ideas meet materials.
Let’s create spaces that speak through surface, texture, and detail.

ask@craftaforms.com

craftaforms.com

@insta.craftaforms

CRAFTA FORMS

FINISHES STUDIO